Arby's

NEW REMODEL FOR: 917 WEST CENTER STREET

GREENWOOD, AR

Sheet Index

ARCHITECTURAL

G101 SHEET INDEX, CODE INFORMATION, GENERAL NOTES, VICINITY MAP, EXTERIOR PAINT SPECIFICATIONS

ALTA SURVEY

C101 SITE PLAN, PLAN DETAILS, ACCESSIBLE ROUTE REQUIREMENTS, GENERAL NOTES

DEMO DEMOLITION PLAN, DEMOLITION NOTES

A101 FLOOR PLAN, DOOR SCHEDULE, DOOR NOTES, ADA GUIDELINES FOR DOORS, GENERAL NOTES, ACCESSIBILITY REQUIREMENTS, INTERIOR FINISH NOTES, FIELD VERIFICATION NOTE

A102 REFLECTED CEILING PLAN, SECTION, LIGHT FIXTURE SCHEDULE, FIELD VERIFICATION NOTE

A103 ROOF PLAN, PREFABRICATED CANOPY NOTES, GENERAL NOTES

A201 BUILDING ELEVATIONS, EXTERIOR FINISH NOTES, SIGNAGE NOTE, GENERAL NOTES, PAINT LEGEND

A202 BUILDING ELEVATIONS, ACCESSIBLE CLEARANCE REQUIREMENTS, SIGNAGE NOTE, GENERAL NOTES, PAINT LEGEND

A301 WALL SECTION, TOWER ISOMETRIC, GENERAL NOTES, FIELD VERIFICATION NOTE

Vicinity Map

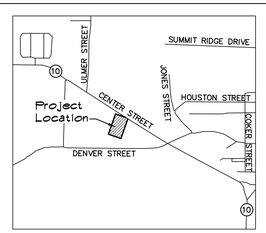

North

Vicinity Map
Greenwood, Arkansas
Not To Scale

Code Information

BUILDING CODE REVIEWED:
INTERNATIONAL BUILDING CODE 2000
2012 ARKANSAS FIRE PREVENTION CODE

NOTE TO BUILDING OFFICIAL:
SCOPE OF THIS PROJECT IS LIMITED TO MINOR EXTERIOR REFINISHING/ REMODEL AND NON-STRUCTURAL INTERIOR REMODEL ONLY. THE BUILDING USE AREAS HAVE NOT CHANGED. THE OCCUPANCY HAS BEEN SLIGHTLY REDUCED.

A. OCCUPANCY CLASSIFICATION: ASSEMBLY - GROUP A-2 SECTION 303

B. OCCUPANT LOAD CALCULATIONS: TABLE 1004.1.2

	SQUARE FOOTAGE	SQUARE FEET PER PERSON	OCCUPANT LOAD
INTERIOR DINING	(actual seating)		38
VESTIBULE/WAITING AREA	87	5	18
KITCHEN	1125	200	6
TOTAL OCCUPANT LOAD FOR EGRESS:			62

C. BUILDING SQUARE FOOTAGE BREAK DOWN:
BUILDING AREA - GROSS SQUARE FOOTAGE = 2,130 S.F.
(INSIDE OF PERIMETER WALL)

D. CONSTRUCTION TYPE: 5-B TABLE 503

E. HEIGHT/AREA CALCULATIONS:

ALLOWED HEIGHT:	1 STORY, 40'	TABLE 503
ACTUAL HEIGHT:	1 STORY, 21'-6"	
ALLOWED AREA:	60000S.F.	TABLE 503
ACTUAL BUILDING AREA:		2,130 S.F.

F. EGRESS:
OCCUPANT LOAD: 62 OCCUPANTS — SECTION 1004.1.2
EGRESS WIDTH REQUIRED: .2" PER PERSON = 12.4" — TABLE 1005.3.2
MINIMUM DOOR WIDTH: 32" — SECTION 1008.1.1
EGRESS WIDTH PROVIDED: (2) @ 36", (1) @ 48" = 120" PROVIDED
MAX. TRAVEL DISTANCE ALLOWED: 200' — TABLE 1016.2

"I Hereby Certify That These Plans And Specifications Have Been Prepared By Me, Or Under My Supervision. I Further Certify That To The Best Of My Knowledge These Plans And Specifications Are As Required By Law And In Compliance With The Arkansas Fire Prevention Code For The State Of Arkansas".

CHRISTOPHER W. WHITE, AIA

General Notes

1. ALL WORK DONE BY THIS CONTRACTOR AND/OR HIS SUBCONTRACTORS SHALL BE PERFORMED IN STRICT ACCORDANCE WITH ALL EXISTING CITY, STATE AND NATIONAL BUILDING CODES, LAWS, SPECIAL ORDINANCES, AND/OR REGULATIONS.
2. CONTRACTOR SHALL FIELD VERIFY ALL EXISTING DIMENSIONS AND CONDITIONS PRIOR TO STARTING ANY CONSTRUCTION. STARTING OF CONSTRUCTION MEANS APPROVAL OF CONDITIONS.
3. THE CONTRACTOR SHALL VERIFY ALL EQUIPMENT REQUIREMENTS PRIOR TO START OF CONSTRUCTION.
4. THE GENERAL CONTRACTOR SHALL INSTALL OWNER PROVIDED OCCUPANT LOAD SIGN IN THE DINING AREA BY THE MAIN EXIT STATING THE MAXIMUM OCCUPANT LOAD.
5. THE GENERAL CONTRACTOR SHALL MOUNT OWNER PROVIDED ACCESSIBILITY RESTROOM SIGNS ON THE LATCH SIDE OF RESTROOM DOORS, MOUNTED 60 INCHES TO THE CENTER OF THE SIGNS FROM THE FINISHED FLOOR.
6. SELF SERVICE SHELVES AND DISPENSING DEVISES FOR TABLEWARE, DISHWARE, CONDIMENTS, FOOD AND BEVERAGES SHALL BE INSTALLED TO COMPLY WITH ADA 4.2 AND FIGURE 5.4.
7. PROVIDE FIRE EXTINGUISHERS PER THE LOCAL FIRE CODE.
8. CONTRACTOR TO VERIFY ALL OWNER PROVIDED ITEMS AND INSTALLATION WORK REQUIRED OF CONTRACTOR PRIOR TO PURCHASING OF MATERIALS OR STARTING OF CONSTRUCTION.
9. CONTRACTOR SHALL COORDINATE THE INSTALLATION ALL FURNITURE VENDOR PROVIDED WORK ON THE PROJECT.
10. THE CONTRACTOR IS RESPONSIBLE FOR OBTAINING ALL APPLICABLE PERMITS ON THE PROJECT, BUILDING PERMIT, HEALTH DEPARTMENT, ETC. PRIOR TO STARTING OF ANY CONSTRUCTION ON THE PROJECT. COPIES OF ALL PERMITS SHALL BE DISTRIBUTED TO THE OWNER AND ARCHITECT.
11. CONTRACTOR TO INSPECT AND INVENTORY ALL "OWNER SUPPLIED" MATERIALS UPON DELIVERY AND REPORT ANY DISCREPANCIES IMMEDIATELY TO THE OWNER.

OWNER:
RB AMERICAN GROUP
6200 OAK TREE BLVD
INDEPENDENCE, OH 44131
PHONE: 216-525-2775

ARCHITECT:
WHITE DESIGN GROUP, P.C.
5801 E 41st ST., SUITE 712
TULSA, OKLAHOMA 74135
PHONE: 918-664-1557

STRUCTURAL ENGINEER:
SNOWDEN ENGINEERING INC.
8128 EAST 63rd SOUTH
TULSA, OKLAHOMA 74133
PHONE: 918-252-4557

Exterior Paint Specifications - Inspire

	Substrate(s)	Sherwin Williams (SW) Product	Remarks
PAINT COLOR #1 Sherwin Williams To Match Dryvit #310 "China White"	E.I.F.S. (Dryvit), stucco; concrete block, cementitious material, Hardi-Panel	Primer: Loxon Acrylic Concrete & Masonry Primer / Sealer, LX02W0050* Finish: A100 Acrylic Satin, A82W51 Option: Loxon Self Cleaning Acrylic, Flat, LX13 Series	Use at least two coats of finish. Primer tinted to SW P1.
	Prefinished metal or factory primed	Primer: Bond-Plex Waterbased Acrylic Coating, B71-200 Finish: Pro Industrial DTM Acrylic EgShel, B66-1250 Series	
	Wood	Primer: A-100 Exterior Latex Primer B42W08041 Finish: A100 Acrylic Satin, A82W51	
PAINT COLOR #2 SW #2808, "Rookwood Dark Brown"	E.I.F.S. (Dryvit), stucco; concrete block, cementitious material, Hardi-Panel	Primer: Loxon Acrylic Concrete & Masonry Primer / Sealer, LX02W0050* Finish: A100 Exterior Acrylic Satin, A82W151 Series Option: Loxon Self Cleaning, Flat, LX13 Series	Use at least two coats of finish. Primer tinted to SW P2.
	Prefinished metal or factory primed	Primer: Bond-Plex Waterbased Acrylic Coating, B71-200 Finish: Pro Industrial DTM Acrylic EgShel, B66-1250 Series	
	Wood	Primer: Exterior Latex Wood Primer B24W08041 Finish: A100 Acrylic Satin, A82W151 Series	
PAINT COLOR #3 SW #6869, "Stop"	E.I.F.S. (Dryvit), stucco; concrete block, cementitious material, Hardi-Panel	Primer: Loxon Acrylic Concrete & Masonry Primer / Sealer,LX02W0050* Finish: Pro Industrial DTM Acrylic Gloss, B66-1050 Series NOTE: Apply SherClear 1K Acrylic Clear Coat for additional UV protection, B66C Series	Use at least two coats of finish. May require 3-4 coats to get proper coverage. Primer tinted to SW P1.
	Prefinished metal or factory primed; Kynar-finished roof or metal storefront	Primer: Bond-Plex Waterbased Acrylic Coating, B71-200 Finish: Pro Industrial DTM Acrylic Gloss, B66-1050 Series NOTE: Apply SherClear 1K Acrylic Clear Coat for additional UV protection, B66C Series	
	Wood	Primer: A-100 Exterior Latex Primer B42W08041 Finish: Pro Industrial DTM Acrylic Gloss, B66-1050 Series NOTE: Apply SherClear 1K Acrylic Clear Coat for additional UV protection, B66C Series	
	Prefinished aluminum; aluminum storefront; galvanized	Primer: Bond-Plex Waterbased Acrylic Coating, B71-200 Finish: Pro Industrial DTM Acrylic Gloss, B66-1050 Series NOTE: Apply SherClear 1K Acrylic Clear Coat for additional UV protection, B66C Series	
PAINT COLOR #4 SW #7024, "Functional Gray"	E.I.F.S. (Dryvit), stucco; concrete block, cementitious material, Hardi-Panel	Primer: Loxon Acrylic Concrete & Masonry Primer / Sealer, LX02W0050* Finish: A100 Exterior Acrylic Satin, A82W151 Series Option: Loxon Self Cleaning, Flat, LX13 Series	Use at least two coats of finish.
	Prefinished metal or factory primed	Primer: Bond-Plex Waterbased Acrylic Coating, B71-200 Finish: Pro Industrial DTM Acrylic EgShel, B66-1250 Series	
	Wood	Primer: Exterior Latex Wood Primer B24W08041 Finish: A100 Acrylic Satin, A82W151	

*Loxon Masonry Conditioner, Guide Coat White, LX03W0100 May also be used on cementious surfaces.

Christopher W. White
Architect AR #3086
5801 E. 41st St., Suite 712
Tulsa, Oklahoma

CHRISTOPHER W. WHITE
REGISTERED ARCHITECT
No. 3086
ARKANSAS

01-08-21

Revisions:

White Design Group, P.C.
Restaurant and Interiors Consulting
5801 EAST 41ST STREET, SUITE 712, TULSA, OKLAHOMA 74135

New Remodel For:
Arby's #7522 - 917 W. Center St.
Greenwood, Arkansas

Sheet Content
Sheet Index, General Notes, Code Info., Exterior Paint Specifications, Vicinity Map

Sheet Number
G101
Date: 01-08-21

Christopher W. White
Architect AR #3086
5801 E. 41st St., Suite 712
Tulsa, Oklahoma

CHRISTOPHER W. WHITE
REGISTERED ARCHITECT
No. 3086
ARKANSAS

01-08-21

Revisions:

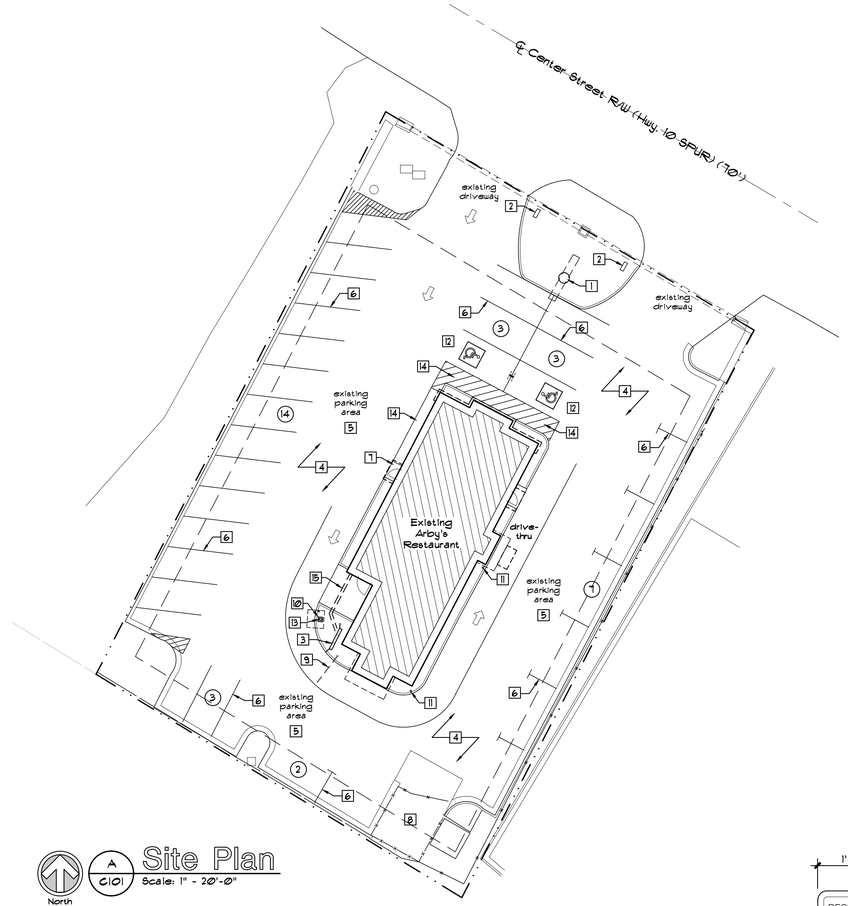

A C101 **Site Plan**
Scale: 1" - 20'-0"

General Notes

1. Crack Fill, Seal & Re-stripe The All Asphalt Areas Of The Parking Lot. Contractor To Sandblast Existing Striping And Curb Painting Prior To Painting.
2. Crack Fill Concrete Paving And Sidewalks.
3. Verify Existing Irrigation System, Make Recommendations To Owner For Any Modifications.
4. Patch And Repair Any Existing Sidewalks That Are Affected By The Work.
5. All Signage Work Shall Be Performed Under A Separate Permit.
6. Repaint The Existing Pipe Handrails And Bollards On The Project, Refer: Exterior Finish Notes.
7. Repaint All Existing Concrete Pole Bases To Match Masonry.

Accessible Route Requirements

The Accessible Parking Spaces, Loading Aisles, New Concrete Ramps And Landing, And Existing Sidewalks Shall Meet Or Exceed Accessibility Requirements For Flatness Of Slope, And Cross Slope Along The Accessible Route Leading To The Building Entrance Door.

The Contractor Shall Provide Survey Information For All Existing And New Accessible Route Slope Information. The Contractor Shall Notify The Owner And Architect Of Any Accessible Route Sidewalk Condition That Is Not In Compliance With Accessible Route Flatness Requirements, Remove Any Areas Of Non-Conformance, And Provide New Construction That Is In Conformance.

All Accessible Routes Shall Comply With The Following:

1. Ground Surfaces Shall Be Stable, Firm And Slip Resistant.
2. Changes In Level Of 1/4" Shall Be Permitted To Be Vertical. Changes In Level Between 1/4" Min. And 1/2" Max. Shall Be Beveled With A Slope Not Greater Than 1:2. Changes In Level Greater Than 1/2" Shall Be Ramped.
3. The Running Slope Of The Accessible Route Shall Not Exceed 1:20 Slope. The Cross Slope Of Walking Surfaces Shall Not Exceed 1:48 Slope.
4. The Clear Width Of An Accessible Route Shall Be Not Less Than 36" Min.
5. Walking Surfaces With A Slope Greater Than 1:20 Shall Be Considered A Ramp. The Maximum Slope Of A Ramp Shall Be 1:12 Slope. The Maximum Cross Slope Of A Ramp Shall Not Exceed 1:48 Slope.
6. A Ramp With A Rise Of Greater Than 6" Shall Have Handrails On Both Sides. The Maximum Rise Of A Single Ramp Shall Be 30".
7. Accessible Parking Spaces And Passenger Loading Aisles Shall Not Exceed 1:48 Slope In Any Direction.

Keynote Schedule

Mark	Description
1	Existing Pole Mounted Signage Head To Be Replaced, Pole And Marquee To Be Reused. Paint Pole, Structure And Cabinets.
2	Existing Directional Signage To Remain. Replace Faces With New, Repair And Paint Cabinets And Support Structures.
3	Existing Menu Board To Remain, Patch And Repair As Required, Provide Touch Up Paint And Make Minor Hardware Repairs As Needed. All Repairs By Owner.
4	Verify Existing Site Lighting Locations, Re-lamp Fixture Heads With LED Lamps, Provided And Installed By Electrical Contractor.
5	Existing Asphalt Parking Lot, Crack Fill & Seal. Owner's Representative To Identify Areas Of Additional Repair.
6	Existing 4" Painted Striping To Be Repainted, Color: Yellow, Typical.
7	Existing ADA Accessible Ramp 1:12 Max. Slope, Verify.
8	Existing Refuse Enclosure To Remain, Replace Damaged Gate Panels And Hardware. Paint Enclosure & Gates To Match Existing.
9	Existing Height Clearance Pole To Be Removed.
10	New Speaker Post, In Adjusted Location, Refer To Detail B/C101. Provide New 6" Steel Pipe Bollard In Front Of Speaker Post, Ptd. Installed By Signage Vendor, Concrete Base By General Contractor.
11	Existing Bollards And Railings To Remain, Paint Color Sherwin Williams #6868 "Stop", Satin Finish, Typical.
12	New ADA Accessible Painted Graphic And Striping At Existing Location. Refer: Plan Detail This Sheet.
13	The Contractor Shall Provide Power To The New Speaker Canopy.
14	Existing Accessible Route - Verify That Existing Slopes And Grades Comply With The ADA Requirements For Accessible Routes, Parking Areas, Loading Zones And Ramps. Notify The Owner And Architect Of Any Areas Of Non-Conformance And Recommend A Solution For Barrier Removal.
15	The Contractor Shall Provide And Install 3/4" Conduit From Menu Board To Panels And 2" Conduit From Menu Board To Above Ceiling For Future Digital Menu Boards.

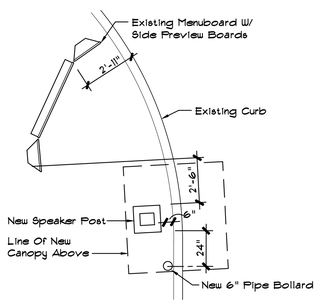

* Verify Exact Location And Configuration W/Owner's Representative In Field.

B C101 **Plan Detail**
Scale: 1/4"=1'-0"

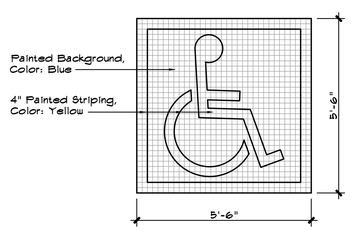

C C101 **Plan Detail**
Scale: 1/2"=1'-0"

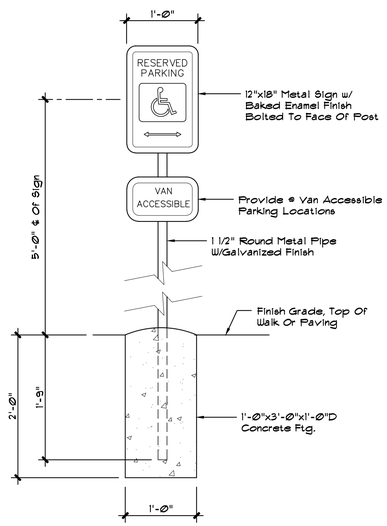

D C101 **Sign Detail**
Scale: 1/2"=1'-0"

New Remodel For:
Arby's #7522 - 917 W. Center St.
Greenwood, Arkansas

White Design Group, P.C.
Restaurant and Interiors Consulting
5801 EAST 41ST STREET, SUITE 712, TULSA, OKLAHOMA 74135

Sheet Content
Site Plan, Plan Details, Accessible Route Requirements, General Notes

Sheet Number
C101
Date: 01-08-21

Christopher W. White
Architect AR #3086
5801 E. 41st St., Suite 712
Tulsa, Oklahoma

CHRISTOPHER W. WHITE
REGISTERED ARCHITECT
No. 3086
ARKANSAS

01-08-21

Revisions:

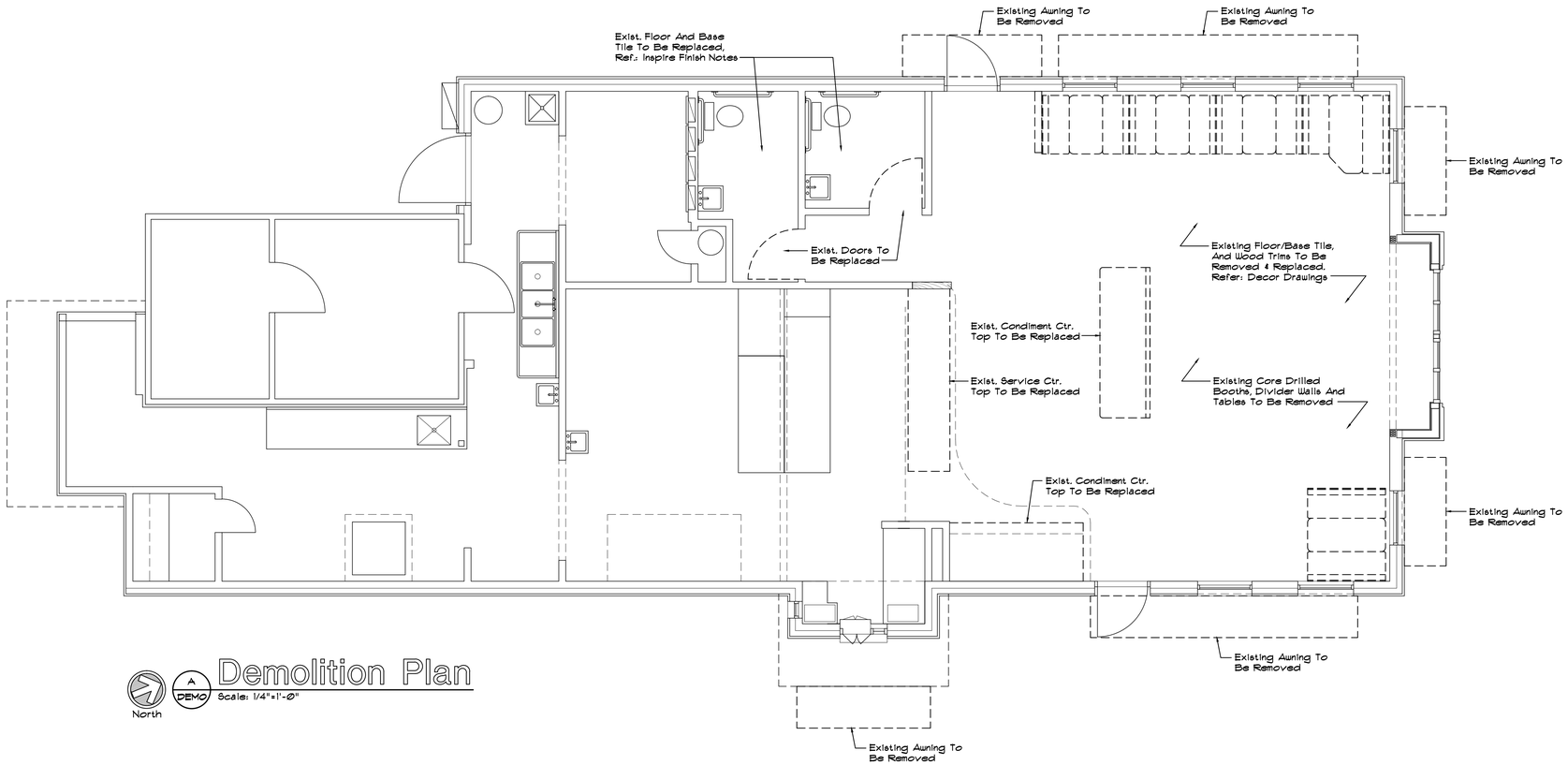

North

A DEMO

Demolition Plan

Scale: 1/4"=1'-0"

Demolition Notes

1. The Demolition Contractor Shall Not Remove Any Structural Load Bearing Walls, Shear Walls, Etc. Without Prior Approval Of The Project Structural Engineer. Verify All Interior Walls As Non-Load Bearing Or Shear Walls Prior To Removal.
2. The Project Structural Engineer Shall Be Notified Upon Uncovering Of Any Potential Structural Framing Prior To Removal. Removal Only Upon Permission Of The Project Structural Engineer.
3. FIELD VERIFICATION REQUIRED - The Contractor Shall Advise The Architect & Structural Engineer Of Any Structural Shear Walls That Extend To The Roof Trusses With Plywood Covering And Tie-Down. Remove Only Upon Approval From The Structural Engineer.
4. The Contractor Shall Verify Any Items That Are To Be Retained For The Owner Prior To Removal From The Site.

New Remodel For:

Arby's #7522 - 917 W. Center St.

Greenwood, Arkansas

White Design Group, P.C.
Restaurant and Interiors Consulting
5801 EAST 41ST STREET, SUITE 712, TULSA, OKLAHOMA 74135

Sheet Content

Demolition Plan,
Demolition Notes

Sheet Number

DEMO

Date: 01-08-21

Christopher W. White
Architect AR #3086
5801 E. 41st St., Suite 712
Tulsa, Oklahoma

CHRISTOPHER W. WHITE
REGISTERED ARCHITECT
No. 3086
ARKANSAS

01-08-21

Revisions:

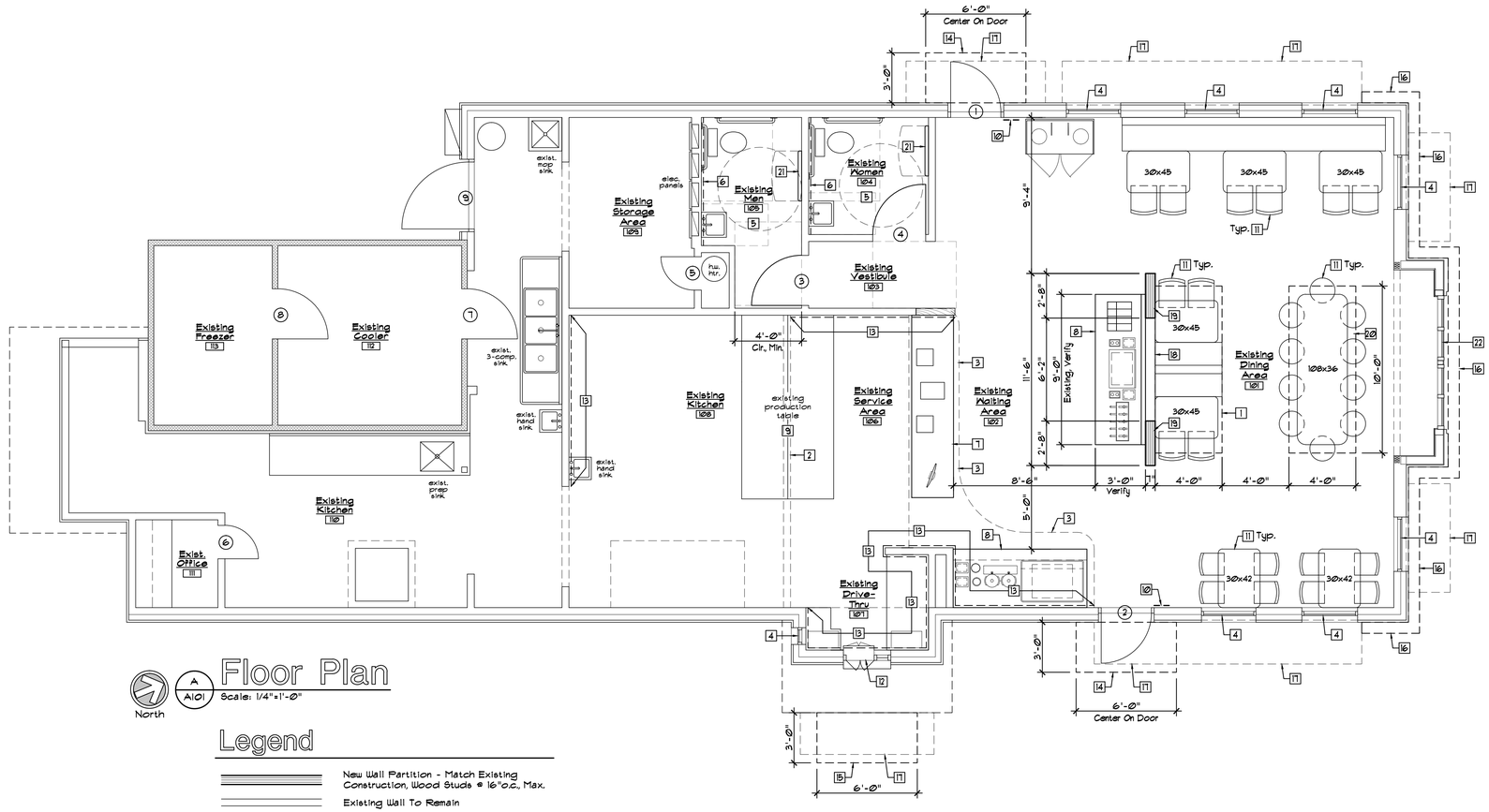

North

Floor Plan

A101 Scale: 1/4"=1'-0"

Legend

- New Wall Partition - Match Existing Construction, Wood Studs @ 16"o.c., Max.
- Existing Wall To Remain
- Existing Wall To Be Removed
- Existing Walk-in Freezer/Cooler Unit Walls.

General Notes

1. Maintain Structural Integrity Of All Existing Shear Walls, Report Any Conflicts To Architect Prior To Construction.
2. Provide Moisture Resistant Backerboard At All Locations Where Ceramic Wall Tile Is Used.
3. Wood Trim Note - Ease All Edges & Sand As Required In Order To Achieve The Highest Quality Of Finished Woodworking. Provide Samples For Approval Prior To Installation.
4. General Contractor To Install Owner Supplied Seating/Decor Package.
5. Provide Firestopping In New Interior Walls At Ceiling And Other Locations As Required By Code.
6. General Contractor To Inspect Existing Dining Room Window Head, Jamb & Sill Flashing & Repair Or Replace As Required.
7. Verify All Existing Dimensions And Conditions Prior To Starting Of Any Construction.

Interior Finish Notes

1. Provide New Chair Rail To Match Existing Trim Throughout Public Areas, Refer: Decor Drawings.
2. Install Faux Ceramic Wainscot Panel Between New Base Tiles And Chair Rail On All Walls Throughout Public Areas, Refer: Decor Drawings.
3. Provide New Inspire Wall Coverings Per Decor Drawings.
4. Provide New Inspire Floor & Base Tiles Throughout Dining Area And Restrooms. Refer: Decor Drawings.
5. Patch And Repair Wall And Floor Finishes As Required Throughout Kitchen.
6. Provide ProCoustic Paint For All Suspended Acoustic Ceiling Tiles Indicated To Be Replaced In The Dining Room.
7. Replace Existing Receptacles To Match Adjacent Surfaces Throughout Public Spaces As Required. No White Outlets On Dark Surfaces.

Door Notes

1. Verify ADA Closers, Thresholds, & Opening Force On All Public Entry & Bathroom Doors.
2. Interior Signage - Contractor To Install New Owner Provided Men, Women & Occupancy Signage. Restroom Signs To Be Mounted On The Latch Side Of Restroom Doors, Mounted 60 Inches To The Center Of The Signs From The Finished Floor.
3. Repair And Reseal All Existing Exterior Door Thresholds, Provide New Weather Stripping As Required.
4. Provide Door Stops At All Exterior Doors To Prevent Damage.

Door Schedule

1. Existing 3'-0" x 7'-0" Storefront Glass Door And Frame To Remain. Provide New ADA Closers, Push/Pull, Hardware And Threshold. Verify Panic Hardware. Clean And Refurbish As Req'd. Install Owner Provided Retro-Fit Toe Kick Panels If Existing Bottom Stile Is Less Than 10"H.
2. Existing 3'-0" x 7'-0" Storefront Glass Door And Frame To Remain. Provide New ADA Closers, Push/Pull, Hardware And Threshold. Verify Panic Hardware. Clean And Refurbish As Req'd. Install Owner Provided Retro-Fit Toe Kick Panels If Existing Bottom Stile Is Less Than 10"H.
3. New 3'-0" x 7'-0" S.C. Wood Door Stained To Match Lobby Trim. Re-Use Existing Frame, Paint, Color To Match Lobby Trim. Provide New Sanitgrasp Door Pull On Pull Side, Bolt Through Door To Steel Push Plate & Closer. Provide Privacy Lock, Provide ADA Compliant Hardware.
4. New 3'-0" x 7'-0" S.C. Wood Door Stained To Match Lobby Trim. Re-Use Existing Frame, Paint, Color To Match Lobby Trim. Provide New Sanitgrasp Door Pull On Pull Side, Bolt Through Door To Steel Push Plate & Closer. Provide Privacy Lock, Provide ADA Compliant Hardware.
5. Existing Door To Remain.
6. Existing Door To Remain.
7. Existing Prefabricated Cooler Door To Remain.
8. Existing Prefabricated Freezer Door To Remain.
9. Existing 4'-0" x 7'-0" Insulated Metal Door To Remain. Verify ADA Closer & Threshold. Verify Existing Panic Hardware. Paint Exterior And Interior To Match Adjacent Surfaces.

ADA Guidelines For Doors

1. Door Openings Shall Provide A Clear Width Of 32 Inches Minimum.
2. Thresholds, If Provided At Doorways, Shall Be 1/2 Inch High, Maximum. Raised Thresholds & Changes In Level @ Doorways Shall Comply With ADA Standard Sections 302 303.
3. Door Closers Shall Be Adjusted So That From An Open Position Of 90 Degrees, The Time Required To Move The Door To A Position Of 12 Degrees From The Latch Is 5 Seconds Minimum.
4. The Allowable Opening Force For Accessible Doors Shall Be 5 Pounds Max.

FIELD VERIFICATION NOTE:
The Contractor And Furniture Vendor Shall Verify All Existing Conditions, Dimensions, Etc. And Report Any Descrepancies And/Or Conflicts With The Proposed Work To The Owner And Architect.

Accessibility Requirements

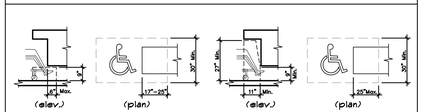

Figure 306.2 Toe Clearance — Figure 306.3 Knee Clearance

Dining Room

NOTE:
The Furniture Provider Shall Ensure That All Dining Room Furniture And Accessories Meet All Applicable Requirements Set Forth By The Accessibility Standards And Federal ADA Standards. These Requirements Include But Are Not Limited To:

1. 226.1 General. Where Dining Surfaces Are Provided For The Consumption Of Food Or Drink, At Least 5 Percent Of The Seating Spaces And Standing Spaces And Standing Spaces At The Dining Surfaces Shall Comply With 902.
2. 226.2 Dispersion. Dining Surfaces And Work Surfaces Required To Comply With 902 Shall Be Dispersed Throughout The Space Or Facility Containing Dining Surfaces And Work Surfaces.
3. 902.2 Clear Floor Or Ground Space. A Clear Floor Space Complying With 305 Positioned For A Forward Approach Shall Be Provided. Knee And Toe Clearance Complying With 306 Shall Be Provided.
4. 902.3 Height. The Tops Of Dining Surfaces Shall Be 28 Inches Minimum And 34 Inches Maximum Above The Finish Floor Or Ground.
5. The Condiment Counter And All Self Service Shelves And Dispensing Devises For Tableware, Dishware, Condiments, Food And Beverages Shall Be Installed To Comply With ADA 308 Reach Range Requirements.

Keynote Schedule

Mark	Description
1	New 4'x10' Prefabricated Wood Plank Soffit. Supplied And Installed By Seating Vendor.
2	Existing Menuboards To Be Removed By GC. New Digital Menuboards To Be Installed By Owners Vendor. Contractor's Electrician To Provide Separate Circuit W/Continuous Power For Menuboards. Install Owner Provided Faux Subway Tile Panels At Existing Bulkhead Wall, Refer: Decor Drawings.
3	Existing Soffit To Remain, Provide Gypsum Board Finish. Paint, Refer: Decor Drawings.
4	Existing Glazing Unit To Remain, Typical. Replace Broken Seal Units, Typical.
5	Existing Restroom Fixtures And Accessories To Remain, Clean And Service All Fixtures And Accessories, Typical.
6	Provide New Faux Red Subway Tile Panels On Wall At Indicated Locations. Refer: Decor Drawings.
7	Existing Service Counter To Be Modified. Remove Existing Counter Top. Install Faux Subway Tile Over Existing Finishes, New Solid Surface Counter Tops Provided And Installed By Seating Vendor. Refer: Section And Decor Drawings.
8	Existing Condiment Counter To Be Modified. Remove Existing Counter Top, Posts And Glass Panels. New Solid Surface Counter Tops & Base Cabinet Laminate Provided And Installed By Seating Vendor. Refer: Decor Drawings.
9	Existing Production Table To Remain.
10	Provide ADA Compliant Tactile Exit Sign.
11	Furniture Provided And Installed By Furniture Vendor. Refer To Furniture Vendor Drawings For Exact Locations And Sizes.

Keynote Schedule

Mark	Description
12	Existing Drive-Thru Window To Remain.
13	Install Owner Provided Faux Tile Panels Over Existing Wall Finish Where Visible To The Public. Owner's Option: Bun Rack Wall.
14	New Entrance Canopy. Provided And Installed By Canopy Manufacturer. Contractor To Provide New Support Blocking And Coordinate Installation.
15	New 2'-0"H. Prefab. Drive-Thru Canopy, Red. Provided & Installed By Canopy Manufacturer. Contractor To Provide New Support Blocking & Coordinate Installation.
16	Line Of New 2'-0"H. Prefabricated Metal Signage Band, Red. Provided And Installed By Signage Vendor. Contractor To Coordinate Installation.
17	Line Of Existing Backlit Awning To Be Removed.
18	New Half Wall To 4'-0" AFF., 2x4 Wood Studs @ 16"o.c. Provide Wood Plank Cladding, Refer: Decor Drawings. Furr Out From Existing Wall.
19	New Wall To Ceiling, 2x4 Wood Studs @ 16"o.c., Provide Wood Plank Cladding, Refer: Decor Drawings. Furr Out From Existing Wall.
20	New 4'x10' Prefabricated Laminated Soffit. Supplied And Installed By Seating Vendor.
21	New Baby Changing Station. Mount With 48" Max. To Top Of Operable Portion, 34" Max. To Top Of Work Surface, & 27" Min. To Bottom Of Work Surface.
22	Existing Glazing Unit To Be Modified, Refer: Elevations.

New Remodel For:

Arby's #7522 - 917 W. Center St.

Greenwood, Arkansas

White Design Group, P.C.
Restaurant and Interiors Consulting
5801 EAST 41ST STREET, SUITE 712, TULSA, OKLAHOMA 74135

Sheet Content

Floor Plan, Accessible Clearance Req'mts, Interior Finish Notes, Door Notes, Door Schedule, General Notes, ADA Guidelines For Doors

Sheet Number

A101

Date: 01-08-21

Christopher W. White
Architect AR #3086
5801 E. 41st St., Suite 712
Tulsa, Oklahoma

CHRISTOPHER W. WHITE
REGISTERED ARCHITECT
No. 3086
ARKANSAS

01-08-21

Revisions:

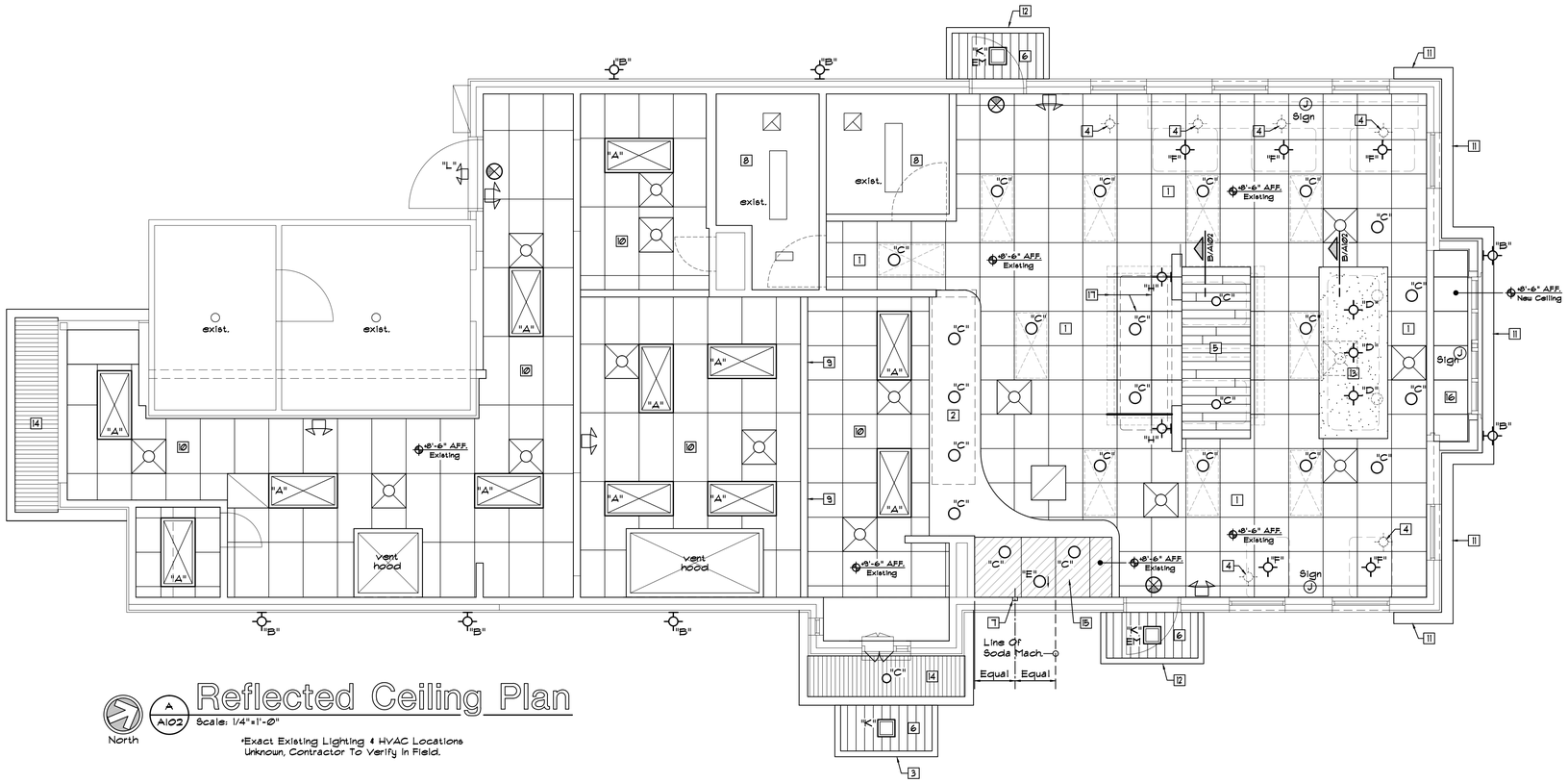

North

A/A102 **Reflected Ceiling Plan**

Scale: 1/4"=1'-0"

*Exact Existing Lighting & HVAC Locations Unknown, Contractor To Verify In Field.

*Verify Existing Can Light Locations And Provide The Owner With A Summary Of Light Fixtures To Be Provided

Emergency Illumination Note

The Contractor Shall Provide Emergency Lights And Ballasts To Ensure 1 Footcandle Measured At The Floor For All Exit Access Passageways, And At Exterior Of All Egress Doorways. The Emergency Power System Shall Provide Power For A Duration Of Not Less Than 90 Minutes.

General Notes

1. The Contractor Shall Verify All Switching Types, Circuiting Requirements And Switching Locations With Owner.
2. All Lighting Fixtures To Be Provided By Owner, Installed By Contractor.
3. The Contractor Shall Coordinate The Installation Of Owner Provided New Speakers In The Public Area Ceilings. Confirm With Owner.
4. The Contractor Shall Coordinate The Installation Of Owner Provided New Building Signage. Relocate Or Provide J-Box And/Or Plywood Backing, Etc. As Required.
5. Clean All Diffusers And Returns Prior To Painting.
6. Relocate Any Existing Diffusers/Returns That Are In The Same Location As New Prefabricated Soffits.
7. Light Fixtures That Protrude 4" Or More From The Wall Surface At The Base Of The Wall Shall Be Mounted 7' High Or Have The Walking Surface Below Restricted To Prevent Non-Compliance With ADA Protruding Objects Requirements.
8. Replace Existing Public Space 2x2 Light Fixtures With New LED Recessed Can Fixtures. Verify Lighting Distribution With Owner - Add Or Relocated Fixtures As Owner Directs. Refer: Light Fixture Schedule.
9. All Ceilings Over Foodservice Preparation Areas Shall Meet Local Health Department Requirements For Washability, Light Reflectance, Etc.

Keynote Schedule

Mark	Description
1	Existing Suspended Ceiling Grid To Remain, Paint To Match Armstrong #7132 'Adobe' Tiles. Provide New Armstrong #7132 Fine Fissured Angled Tegular Ceiling Tiles, Color: 'Adobe'. Provide Alternate Pricing For Existing Ceiling Tiles To Remain, Patch, Repair And Paint To Match Color: 'Adobe', Verify With Owner. Install New Owner Provided Speakers At Existing Locations.
2	Existing Soffit To Remain. Refer: Decor Drawings For Finish Application.
3	New 2'-0"H. Prefab. Drive-Thru Canopy, Red. Provided & Installed By Canopy Manufacturer. Contractor To Provide New Support Blocking & Coordinate Installation.
4	Existing Decorative Wall Sconce Light Fixture Or Pendant Fixture To Be Removed. Patch & Repair Finishes As Required.
5	New 4'x10' Prefabricated Soffit Element With Wood Plank Finish, Stained. Supplied And Installed By Seating Vendor. Mount To Ceiling Using All-Thread To Existing Roof Trusses, Typical.
6	New Metal Soffit Panels By Canopy Supplier.
7	Provide New Electrical Power To New 'A' Sign Above Condiment Counter On Back Wall. Center Between Soda Machine And Wall, And Center Vertically From The Top Of Condiment Ctr. And B.O. Existing Beams, Verify Location.
8	Existing Gypsum Board Ceiling, Patch And Repair As Required, Paint. Refer: Finish Notes.
9	Existing Menuboards To Be Removed By GC. New Digital Menuboards To Be Installed By Owners Vendor. Install Owner Provided Faux Subway Tile Panels At Existing Bulkhead Wall, Refer Decor Drawings.
10	Existing Kitchen Ceiling Tile & Grid To Remain. Patch And Repair As Required.
11	Prefabricated Color Band Element, Provided & Installed By Signage Contractor, Coordinated By Contractor.
12	New Entrance Canopy. Provided & Installed By Canopy Manufacturer. Contractor To Provide New Support Blocking And Coordinate Installation.
13	New 4'x10' Prefabricated Soffit Element With Plastic Laminate Finish, Red. Supplied And Installed By Seating Vendor. Mount To Ceiling Using All-Thread To Existing Roof Trusses, Typical.
14	Existing Metal Soffit Panels To Remain. Patch, Repair, And Paint. Color: White.
15	New Suspended Vinyl Faced Ceiling Tiles Into Existing Grid. Paint Grid, Color To Match Armstrong #7128 "Adobe". Above New Condiment Counter Only.
16	Existing Vaulted Ceiling To Be Lowered, Provide New Suspended Ceiling. Refer: Decor Drawings.
17	Existing Soffit To Be Removed, Extend Ceiling Tiles And Grid To Match Existing.

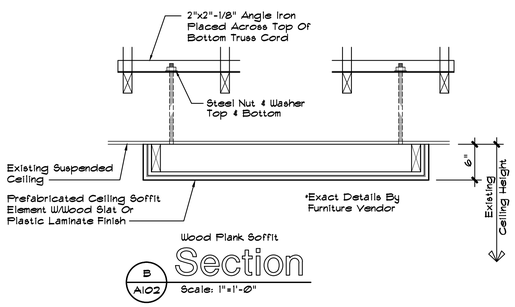

B/A102 **Section**

Scale: 1"=1'-0"

Supply Air Diffuser

Return Air Diffuser

Exhaust Fan

*9'-6" AFF. Ceiling Height

(J) SIGN Existing Outlet for Signage, Verify With Signage Contractor. Verify Exact Vertical And Horizontal Alignment For Signage.

FIELD VERIFICATION NOTE:
The Contractor And Furniture Vendor Shall Verify All Existing Conditions, Dimensions, Etc. And Report Any Descrepancies And/Or Conflicts With The Proposed Work To The Owner And Architect.

Light Fixture Schedule

FIXTURE/ TYPE	MANUFACTURER CATALOG NUMBER	VOLTS	LAMPS	MOUNTING	NOTE	REMARKS
"A"	New LED Replacement Light Fixture In Existing Locations, Supplied By Owner	120	LED	Grid	1,5,6,7	24" x 48" Troffer w/Acrylic Cover
"B"	New Lithonia OLLWJ-WH Or Equal, Supplied By Owner	120	LED	Surface	1,3,5,6,7	Mount At Existing Heights & Locations.
"C"	New Or Remodel Fixture: LED Recessed Can, Supplied By Owner	120	LED	Recessed	1,5,6,7	Contractor to Verify Health Dept. Req.
"D"	New Inspire Pendant Fixture, Kitchler 78200 Or Equal, Supplied By Owner	120	A19	Pendant	1,6,7	Refer To Decor
"E"	Existing Recessed Wall Wash Fixture To Be Replaced With LED, Supplied By Owner	120	LED	Recessed	1,4,6,7	Contractor to Verify Health Dept. Req.
"F"	New Inspire Glass Pendant Fixture, Refer: Decor Drawings, Supplied By Owner	120	LED	Pendant	1,6,7	Refer To Decor Drawings
"H"	New Inspire Interior Wall Sconce Supplied By Owner	120	LED	Wall	1,3,5,6,7	Refer To Decor Drawings For Mtg. Hts.
"K"	New LED Canopy Light, Supplied By Canopy Mfr.	120	LED	Surface	1,3	Provide Emergency Battery Backup At Egress Door Canopies
"L"	New Emergency Egress Light Fixture, Juno N5LBZ9DCB Or Equal, Supplied By Owner	120	LED	Wall	1,2,3,6	Emergency Battery Backup
	Existing Emergency Light To Be Replaced, Juno NIL-WH Or Equal, Supplied By Owner	120	LED	Surface	1,2,6	Emer. 12V batt. w/time delay option. Verify mtg. heights w/ Arch.
	Existing Exit Light To Be Replaced, Juno NXPCL3GWH Or Equal, Supplied By Owner	120	LED	Ceiling Mount	1,2,6,7	Red Letters on White panel. Emer. Power

NOTES:
1. Verify Finish And Lamps With Owner.
2. Fixture Utilizes An Emergency Battery Backup System And Shall Provide 90 Minutes Of Backup Power
3. Fixture Shall Be U.L. Listed And Labeled For Wet Locations.
4. Provide Flange Kit When Installed In a Gypsum Board Or Any Hard Ceiling And Verify With Owner The Quantity And Location.
5. Verify Size Of Fixture And Replace With Similar. Owner To Approve Replacement Fixture Prior To Ordering.
6. All Lighting Fixtures/Lamps/Accessories Are Supplied By Owner And Installed By Contractor.
7. All Lighting Fixtures In Public Spaces Shall Be The Same Lumens And Color Temperature (K). Verify With Owner.
8. Provide Protective Lens For Can Lights Located Over Foodservice Areas As Required By The Health Department.
9. Center All Pendants On Table Tops Where Indicated.
10. Pendants Shall Be Mounted At 9'-6"AFF. Over Standard Ht. Tables And 6'-6" AFF. Over Barstool Height Tables.

White Design Group, P.C.
Restaurant and Interiors Consulting
5801 EAST 41ST STREET, SUITE 712, TULSA, OKLAHOMA 74135

New Remodel For:
Arby's #7522 - 917 W. Center St.
Greenwood, Arkansas

Sheet Content
Reflected Ceiling Plan, Light Fixture Schedule, Emergency Illumination Note, General Notes, Field Verification Note, Section

Sheet Number
A102
Date: 01-08-21

Christopher W. White
Architect AR #3086
5801 E. 41st St., Suite 712
Tulsa, Oklahoma

CHRISTOPHER W. WHITE
REGISTERED ARCHITECT
No. 3086
ARKANSAS

01-08-21

Revisions:

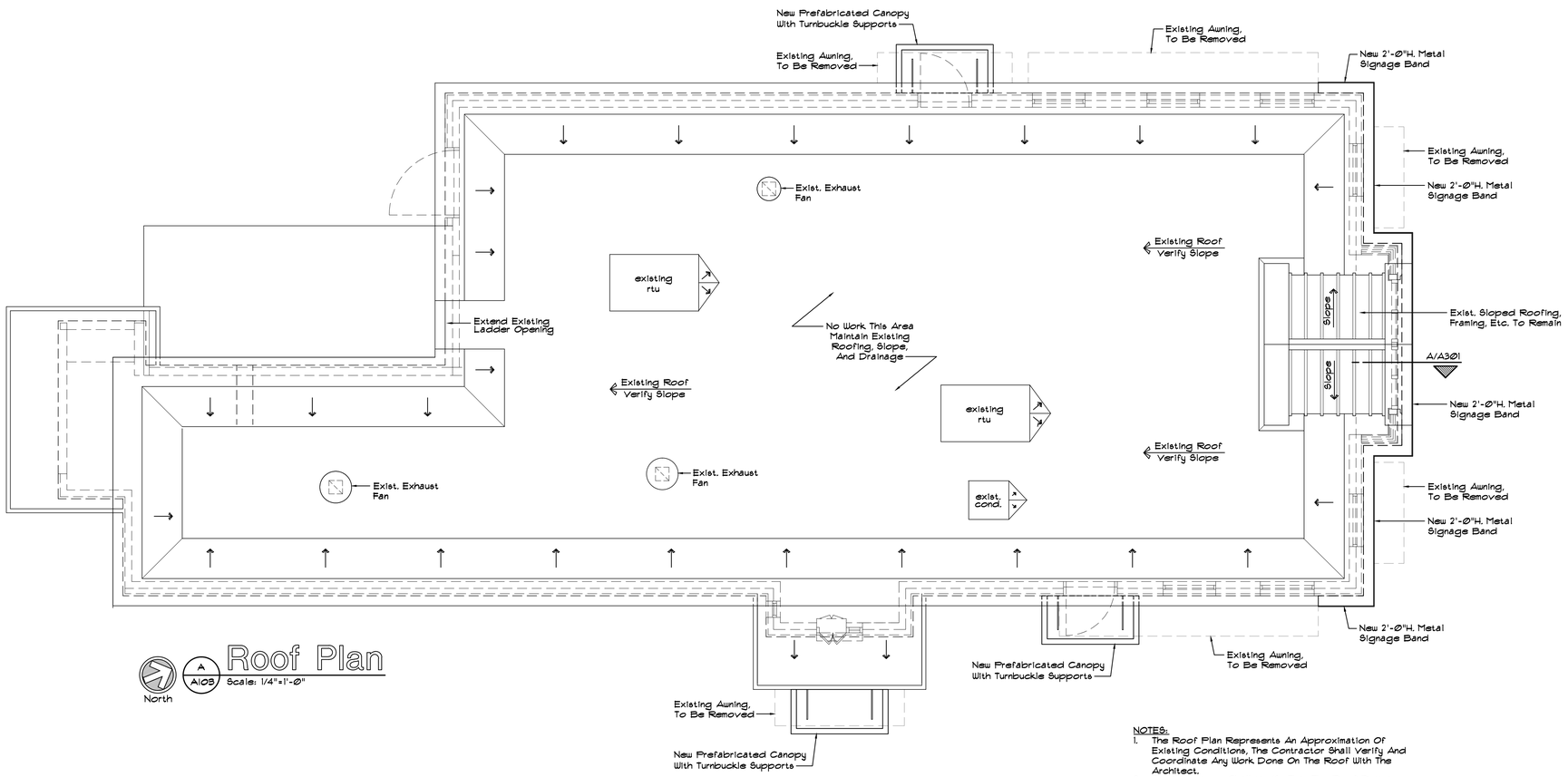

A
A103

Roof Plan

Scale: 1/4"=1'-0"

NOTES:

1. The Roof Plan Represents An Approximation Of Existing Conditions, The Contractor Shall Verify And Coordinate Any Work Done On The Roof With The Architect.
2. The Contractor Shall Verify That The Roof Drainage System, Roof Drains, Etc. Are Clear And Functioning

PREFABRICATED CANOPY NOTES

The Prefabricated Canopy Manufacturer Shall Be Responsible For The Proper Design & Engineering Required For The Construction And Installation Of The Canopies. The Canopy Manufacturer Shall Provide Fully Engineered Connection Details Sealed And Signed By A Structural Engineer Licensed And In Good Standing In The State That The Project Is Located. The Design Documents Shall Indicate The Existing Conditions Accurately And Be Submitted To The Building Official, Architect, And Owner Prior To Starting Of Any Construction.

White Design Group, P.C.
Restaurant and Interiors Consulting
5801 EAST 41ST STREET, SUITE 712, TULSA, OKLAHOMA 74135

New Remodel For:
Arby's #7522 - 917 W. Center St.
Greenwood, Arkansas

Sheet Content

Roof Plan, Accessible Clearance Req'mts., General Notes, Prefab. Canopy Note

Sheet Number

A103

Date: 01-08-21

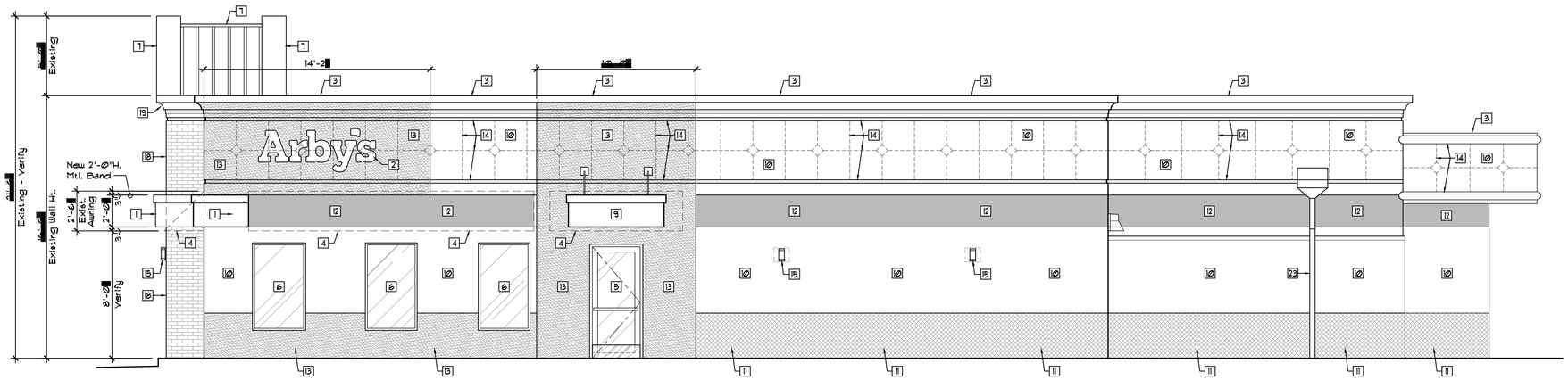

A A201 West Elevation

Scale: 1/4"=1'-0"

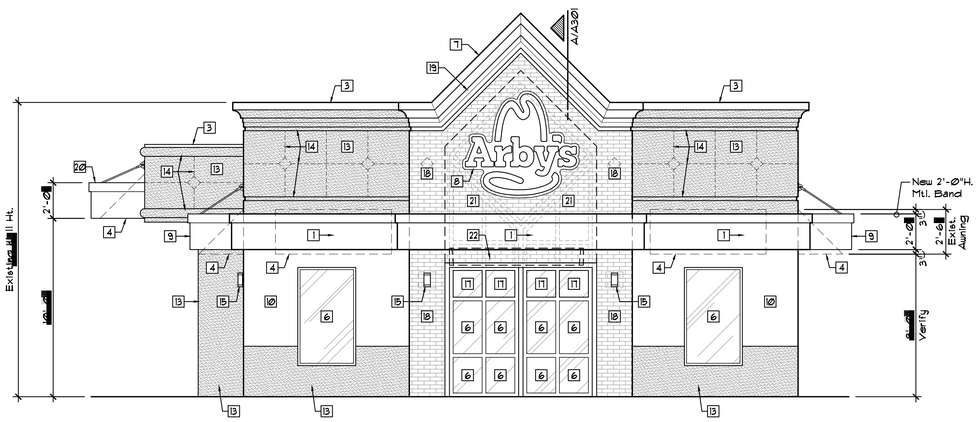

B A201 North Elevation

Scale: 1/4"=1'-0"

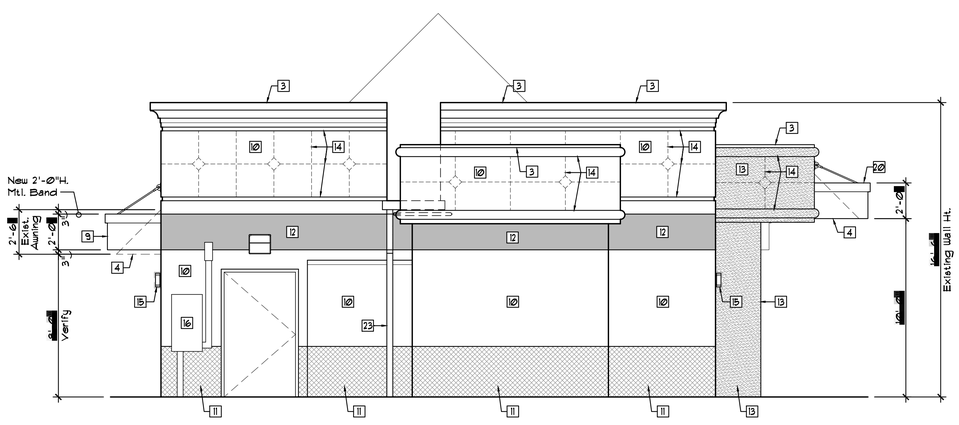

B A201 South Elevation

Scale: 1/4"=1'-0"

Signage Note

1. All Signage Work Shall Be Performed Under A Separate Permit.

General Notes

1. The Contractor Shall Not Perform Any Structural Demolition Prior To Field Verification From The Structural Engineer.
2. These Drawings Represent An Approximation Of Exist. Conditions. The Contractor Shall Notify The Architect Of Any Discrepancies Immediately Upon Uncovering Of The Existing Structural Conditions.
3. All Exterior Surfaces Shall Be Cleaned, Patched, Repaired As Required And Prepared To Receive New Paint Per Drawings And Utilizing Arby's Paint Specifications.
4. The Contractor Shall Provide Blocking For Signage As Directed By Suppliers.
5. The Contractor Shall Provide All Flashing, Assemblies, Details, Etc.
6. Verify And Maintain All Existing Roof Drain/Downspout Assemblies.
7. The Contractor Shall Provide All Necessary Details As Required By The E.I.F.S. Manufacturer In Order To Maintain The Warranty. Provide All Backer Rods, Sealant Locations, Flashing Minimum Coverages, Etc.
8. Provide Dryvit E.I.F.S. System Or Approved Equal, System To Have A Water Management System With Appropriate Details. Provide Submittal With Proposed System And Details Indicated. All E.I.F.S. Work Shall Be Performed Per Manufacturers Requirements To Maintain Warranty.
9. The Contractor Shall Review All New E.I.F.S., Paint & Coping Cap Colors And Their Locations With The Owner Prior To Proceeding With The Work.
10. Exterior Light Fixtures That Protrude 4" Or More From The Wall Surface At The Base Of The Wall Shall Be Mounted 7' High Or Have The Walking Surface Below Restricted To Prevent Non-Compliance With ADA Protruding Objects Requirements.

Paint Legend

PAINT COLOR #1
Sherwin Williams To Match Dryvit #310 "China White". Satin Finish, Prepare And Prime As Required.

PAINT COLOR #2
Sherwin Williams #2808 "Rookwood Dark Brown". Satin Finish. Prepare & Prime As Required.

PAINT COLOR #3
Sherwin Williams #6869 "Stop". Satin Finish. Prepare & Prime As Required.

PAINT COLOR #4
Sherwin Williams #7024 "Functional Gray". Satin Finish. Prepare & Prime As Required.

Exterior Finish Notes

EXTERIOR INSULATION AND FINISH SYSTEM (E.I.F.S.) W/SIM. BRICK PATTERN, COLOR #1 - FRONT TOWER
Simulated Brick Stencil Pattern W/Dryvit - Color #1: #310 "China White".

EXTERIOR INSULATION AND FINISH SYSTEM (E.I.F.S.) COLOR #1
Dryvit - Color: #310 "China White"
Sandblast Texture. Coping Color #1.

EXTERIOR INSULATION AND FINISH SYSTEM (E.I.F.S.) COLOR #2
Dryvit - Color: To Match Sherwin Williams #2808 "Rookwood Dark Brown".
Sandblast Texture. Coping Color #2.

METAL COPING
Paint Color #3 Red. Satin Finish.
Prepare & Prime As Required

PAINT COLOR #1
Sherwin Williams To Match E.I.F.S. Color #1 Dryvit #310 "China White". Satin Finish, Prepare And Prime As Required.

PAINT COLOR #2
Sherwin Williams #2808 "Rookwood Dark Brown". Satin Finish. Prepare & Prime As Required.

PAINT COLOR #3
Sherwin Williams #6869 "Stop". Satin Finish. Prepare & Prime As Required.

PAINT COLOR #4
Sherwin Williams #7024 "Functional Gray". Stain Finish. Prepare & Prime As Required.

PREFABRICATED 2'-0" HIGH COLOR BAND
Color: Prefinished Metal, Red. Provided By Signage Manufacturer.

Keynote Schedule

Mark	Description
1	New 2'-0"H. Prefab. Metal Signage Band, Red, By Owner. Contractor To Coordinate Installation.
2	New 2'-0"H. Backlit Signage By Owner. Contractor To Coordinate Installation.
3	Existing Prefinished Metal Coping To Remain, Paint Color #3 Red, Patch And Repair As Required, Refer: Exterior Finish Notes.
4	Existing Backlit Awning To Be Removed. Patch, Repair Surfaces As Required.
5	Existing Storefront Glass Door To Remain. Clean Frames, Repair Damaged Glass, Provide New ADA Compliant Hardware, Push/Pull, Threshold & Closer, Typical. Provide New 10" High Min. Kick Guard If Required.
6	Existing Glazing Unit To Remain, Typical. Clean Frames, Replace Broken Seal Units, Typical.
7	Existing Prefinished Sloped Metal Roofing & Framing To Remain, Paint Color #3 Red. Refer: Exterior Finish Notes.
8	New 6'-0" High Backlit 'Hat' Signage By Owner. Contractor To Coordinate Installation.
9	New 2'-0"H. Prefab. Entrance Canopy Provided And Installed By Canopy Manufacturer. Contractor To Provide New Support Blocking & Coordinate Installation. See Note.
10	Existing E.I.F.S. Wall Surface To Remain. Patch And Repair As Required, Paint Color #1, Refer: Exterior Finish Notes.
11	New Painted Wainscot Over E.I.F.S. Wall Surface. Patch And Repair As Required, Paint Color #4. Refer: Exterior Finish Notes.
12	New Painted Accent Band Over Existing Wall Surface, Patch And Repair As Required, Paint Color #3. Refer: Exterior Finish Notes.
13	Existing E.I.F.S. Wall Surface And Painted Wainscot. Patch And Repair As Required, Paint Color #2, Refer: Exterior Finish Notes.
14	Existing E.I.F.S. Cornice, And Reveals To Remain. Prepare As Required And Paint Over.
15	New LED Exterior Performance Wall Sconce At Existing Location, Refer: Light Fixture Schedule.
16	Exist. Electrical Panel To Remain. Prepare & Paint: Color #1.
17	Modify Exist. Glazing System To Accommodate New Config. Provide New 1" Insulated Glazing & Mullions As Required.
18	New E.I.F.S. Finish W/Brick Stencil Pattern, Color #1, Over Existing E.I.F.S. Remove Decorative Tiles, Skim And Fill Existing Reveals. Refer: Exterior Finish Notes.
19	Existing E.I.F.S. Cornice And Reveals At 'Brick' Tower To Be Painted Color #1.
20	New 2'-0"H. Prefab. Drive-Thru Canopy, Red. Provided & Installed By Canopy Manufacturer. Contractor To Provide New Support Blocking & Coordinate Installation.
21	New E.I.F.S. W/Brick Stencil Pattern, Color #1, Over Rigid Insulation Over Tyvek Stucco Wrap Over New 1/2" Exterior Sheathing Over New 2x Infill Framing. Refer: Exterior Finish Notes. Provide Flush Transition To Adjacent E.I.F.S.
22	Line Of New 2x Wood Header, Refer: Wall Section.
23	Existing Collector Heads, Downspouts And Gutter System To Remain. Prepare & Paint: Color #1.

Christopher W. White
Architect AR #3086
5801 E. 41st St., Suite 712
Tulsa, Oklahoma

CHRISTOPHER W. WHITE
REGISTERED ARCHITECT
No. 3086
ARKANSAS

01-08-21

Revisions:

White Design Group, P.C.
Restaurant and Interiors Consulting
5801 EAST 41ST STREET, SUITE 712, TULSA, OKLAHOMA 74135

New Remodel For:
Arby's #7522 - 917 W. Center St.
Greenwood, Arkansas

Sheet Content
Building Elevations, Exterior Finish Notes, Signage Note, General Notes, Paint Legend

Sheet Number
A201

Date: 01-08-21

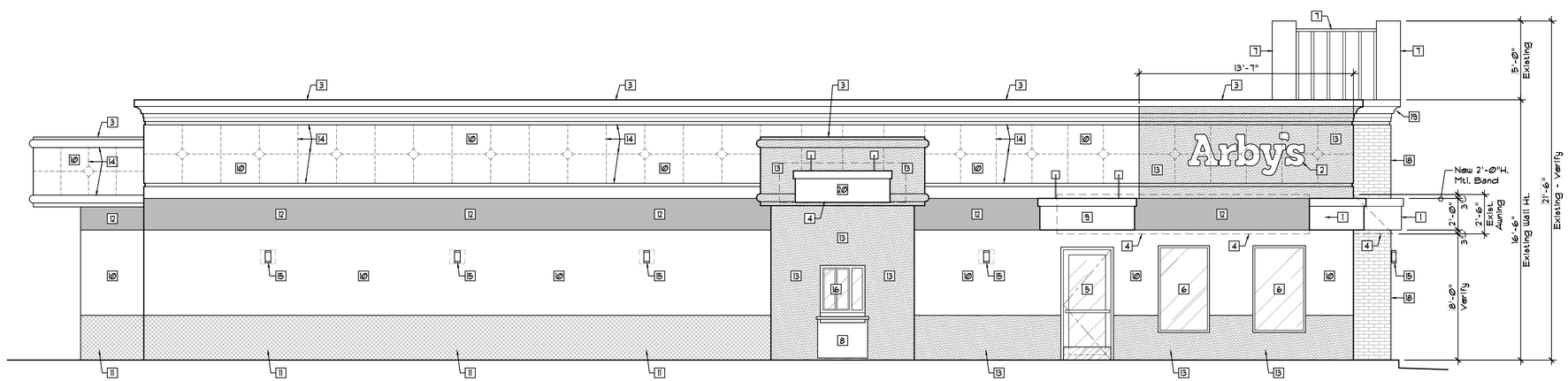

A A202 East Elevation

Scale: 1/4"=1'-0"

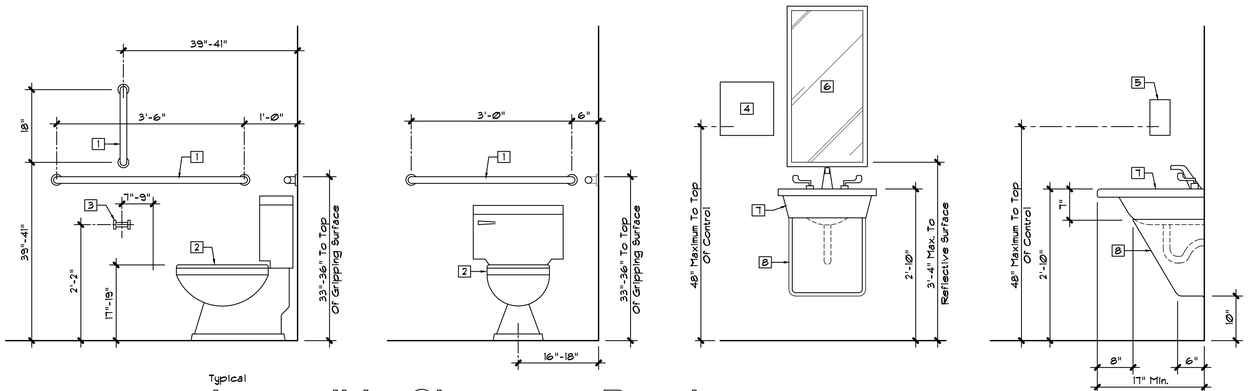

Typical

B A202 Accessible Clearance Requirements

Scale: 3/4"=1'-0"

ACCESSIBILITY KEYNOTES

1. Grab Bars - 1 1/2" Dia. Mounted 1 1/2" Out From Wall Surface. Provide Adequate Blocking And Connection To Support 250 lbs Of Force. Provided & Installed By General Contractor.
2. Water Closet @ 17" to 19", Measured To Top Of Seat.
3. Toilet Paper Dispenser, By Owner.
4. Paper Towel Dispenser, By Owner.
5. Soap Dispenser, By Owner.
6. Plate Glass Mirror, Bobrick "513", Provide Mounting Indicated To The Reflective Surface Of The Mirror, By G.C.
7. Wall Hung ADA Lav., Ref.: Plumbing Fixture Schedule.
8. Provide ADA Compliant Lav. Protective Enclosure For Drain Pipes. LAV SHIELD - Mdl.#2018, Or Pre-cut Mdl. As Applicable.

*The Contractor Shall Field Verify The Existing Facilities For ADA Compliance & Rectify Any Areas Of Non-Compliance

Signage Note

1. All Signage Work Shall Be Performed Under A Separate Permit.

General Notes

1. The Contractor Shall Not Perform Any Structural Demolition Prior To Field Verification From The Structural Engineer.
2. These Drawings Represent An Approximation Of Exist. Conditions. The Contractor Shall Notify The Architect Of Any Discrepancies Immediately Upon Uncovering Of The Existing Structural Conditions.
3. All Exterior Surfaces Shall Be Cleaned, Patched, Repaired As Required And Prepared To Receive New Paint Per Drawings And Utilizing Arby's Paint Specifications.
4. The Contractor Shall Provide Blocking For Signage As Directed By Suppliers.
5. The Contractor Shall Provide All Flashing, Assemblies, Details, Etc.
6. Verify And Maintain All Existing Roof Drain/Downspout Assemblies.
7. The Contractor Shall Provide All Necessary Details As Required By The E.I.F.S. Manufacturer In Order To Maintain The Warranty. Provide All Backer Rods, Sealant Locations, Flashing Minimum Coverages, Etc.
8. Provide Dryvit E.I.F.S. System Or Approved Equal, System To Have A Water Management System With Appropriate Details. Provide Submittal With Proposed System And Details Indicated. All E.I.F.S. Work Shall Be Performed Per Manufacturers Requirements To Maintain Warranty.
9. The Contractor Shall Review All New E.I.F.S., Paint & Coping Cap Colors And Their Locations With The Owner Prior To Proceeding With The Work.
10. Exterior Light Fixtures That Protrude 4" Or More From The Wall Surface At The Base Of The Wall Shall Be Mounted 7' High Or Have The Walking Surface Below Restricted To Prevent Non-Compliance With ADA Protruding Objects Requirements.

Paint Legend

PAINT COLOR #1
Sherwin Williams To Match Dryvit #310 "China White". Satin Finish, Prepare And Prime As Required.

PAINT COLOR #2
Sherwin Williams #2808 "Rookwood Dark Brown". Satin Finish. Prepare & Prime As Required.

PAINT COLOR #3
Sherwin Williams #6869 "Stop". Satin Finish. Prepare & Prime As Required.

PAINT COLOR #4
Sherwin Williams #7024 "Functional Gray". Satin Finish. Prepare & Prime As Required.

Keynote Schedule

Mark	Description
1	New 2'-0"H. Prefab. Metal Signage Band, Red, By Owner. Contractor To Coordinate Installation.
2	New 2'-0"H. Backlit Signage By Owner. Contractor To Coordinate Installation.
3	Existing Prefinished Metal Coping To Remain, Paint Color #3 Red, Patch And Repair As Required, Refer: Exterior Finish Notes.
4	Existing Backlit Awning To Be Removed. Patch, Repair Surfaces As Required.
5	Existing Storefront Glass Door To Remain. Clean Frames, Repair Damaged Glass, Provide New ADA Compliant Hardware, Push/Pull, Threshold & Closer, Typical. Provide New 10" High Min. Kick Guard If Required.
6	Existing Glazing Unit To Remain, Typical. Clean Frames, Replace Broken Seal Units, Typical.
7	Existing Prefinished Sloped Metal Roofing & Framing To Remain, Paint Color #3 Red. Refer: Exterior Finish Notes.
8	Existing Solid Surface Drive-Thru Apron & Shelf, To Remain. Patch And Repair As Required.
9	New 2'-0"H. Prefab. Entrance Canopy Provided And Installed By Canopy Manufacturer. Contractor To Provide New Support Blocking & Coordinate Installation. See Note.
10	Existing E.I.F.S. Wall Surface To Remain. Patch And Repair As Required, Paint Color #1, Refer: Exterior Finish Notes.
11	New Painted Wainscot Over E.I.F.S. Wall Surface. Patch And Repair As Required, Paint Color #4. Refer: Exterior Finish Notes.
12	New Painted Accent Band Over Existing Wall Surface, Patch And Repair As Required, Paint Color #3. Refer: Exterior Finish Notes.
13	Existing E.I.F.S. Wall Surface And Painted Wainscot. Patch And Repair As Required, Paint Color #2, Refer: Exterior Finish Notes.
14	Existing E.I.F.S. Cornice, And Reveals To Remain. Prepare As Required And Paint Over.
15	New LED Exterior Performance Wall Sconce At Existing Location, Refer: Light Fixture Schedule.
16	Existing Drive-Thru Window To Remain, Repair Hardware As Required.
17	Modify Exist. Glazing System To Accommodate New Config. Provide New 1" Insulated Glazing & Mullions As Required.
18	New E.I.F.S. Finish W/Brick Stencil Pattern, Color #1, Over Existing E.I.F.S. Remove Decorative Tiles, Skim And Fill Existing Reveals. Refer: Exterior Finish Notes.
19	Existing E.I.F.S. Cornice And Reveals At 'Brick' Tower To Be Painted Color #1.
20	New 2'-0"H. Prefab. Drive-Thru Canopy, Red. Provided & Installed By Canopy Manufacturer. Contractor To Provide New Support Blocking & Coordinate Installation.

Christopher W. White
Architect AR #3086
5801 E. 41st St., Suite 712
Tulsa, Oklahoma

CHRISTOPHER W. WHITE
REGISTERED ARCHITECT
No. 3086
ARKANSAS

01-08-21

Revisions:

White Design Group, P.C.
Restaurant and Interiors Consulting
5801 EAST 41ST STREET, SUITE 712, TULSA, OKLAHOMA 74135

New Remodel For:
Arby's #7522 - 917 W. Center St.
Greenwood, Arkansas

Sheet Content

Building Elevation, Accessible Clearance Req'mts, Signage Note, General Notes, Paint Legend

Sheet Number

A202

Date: 01-08-21

Christopher W. White
Architect AR #3086
5801 E. 41st St., Suite 712
Tulsa, Oklahoma

CHRISTOPHER W. WHITE
REGISTERED ARCHITECT
No. 3086
ARKANSAS

01-08-21

Revisions:

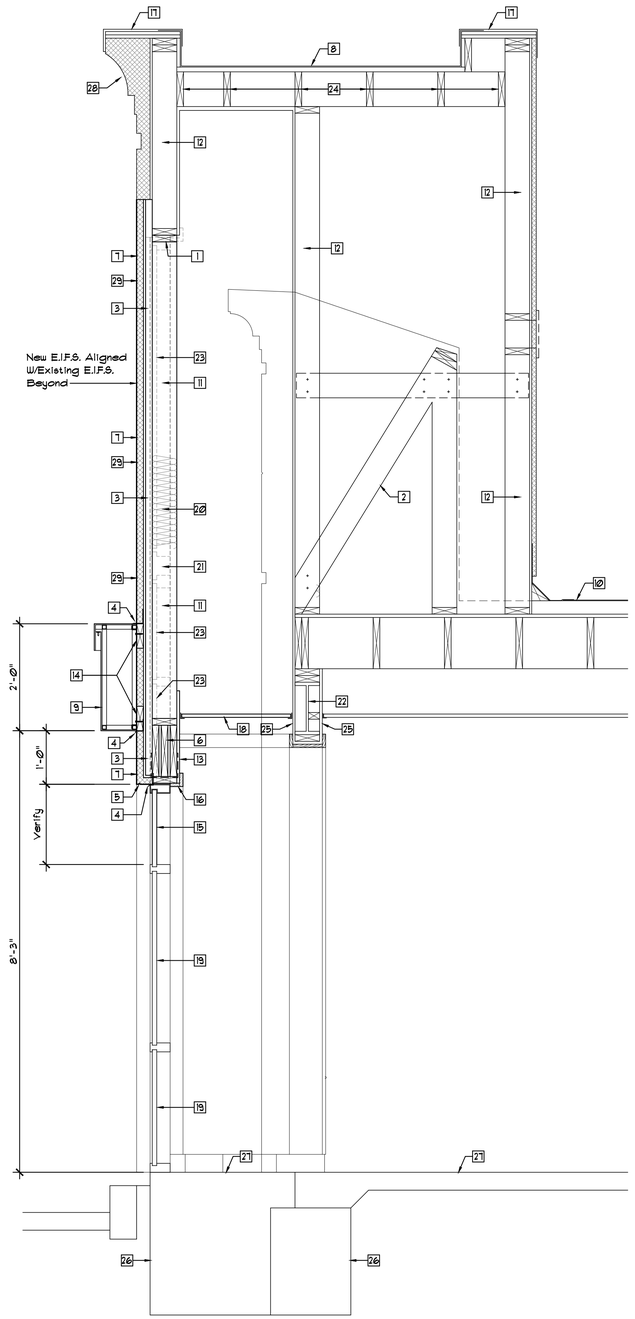

A A301 Section
Scale: 3/4"=1'-0"

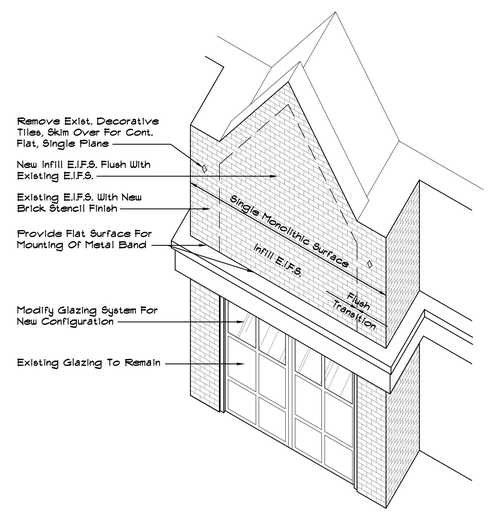

B A301 Tower Isometric
No Scale
*Existing Glazing Infill Remodel Projects

General Notes

1. All Blocking Cut To Fit Tight And (2) 8d Toe Nails Ea. End Min.
2. Provide Sealant And Backer Rods At All Appropriate Locations. At All Flashings, Coping Caps, Window And Door Frames, Etc.
3. The Contractor Shall Provide All Necessary Details As Required By The E.I.F.S. Manufacturer In Order To Maintain The Warranty. Provide All Backer Rods, Sealant Locations, Flashing Minimum Coverages, Etc.
4. Provide Dryvit E.I.F.S. System Or Approved Equal, System To Have A Water Management System With Appropriate Details. Provide Submittal With Proposed System And Details Indicated.
5. Contractor To Verify Continuous Wall, Roof Insulation And Vapor Barrier And Provide New As Required To Maintain Fully Insulated And Weatherproof Building Envelope
6. Provide Galvanized Or Prefinished Metal Flashing At All Windows, Penetrations, Coping Caps, Etc. In Accordance With SMACNA Industry Standard Details Minimum. Provide Shop Drawings For Each Condition To The Owner And Architect For Approval.
7. The Contractor Shall Not Perform Any Structural Demolition Prior To Field Verification From The Structural Engineer.
8. This Plan Represents An Approximation Of Existing Conditions. The Contractor Shall Notify The Architect Of Any Discrepancies Immediately Upon Uncovering Of The Existing Structural Conditions.
9. The Contractor Shall Provide All Necessary Details As Required By The E.I.F.S. Manufacturer In Order To Maintain The Warranty. Provide All Backer Rods, Sealant Locations, Flashing Minimum

EXTENSIVE FIELD VERIFICATION REQUIRED

The Contractor Shall Inspect The Existing Conditions And Report Any Differences To The Assumed Conditions Indicated On The Wall Sections To The Architect And Structural Engineer. The Wall Sections Represent An Approximation Of Existing Conditions Based Upon The Limited Amount Of Visual Inspection That Was Available Without Destructive Demolition To The Architect.

Keynote Schedule

Mark	Description
1	New 2x6 Top Plate.
2	Existing Structural Wood Truss To Remain.
3	New Infill 2x Framing @ 16o.c.
4	Galvanized Flashing.
5	New E.I.F.S. Drip Reveal.
6	New 3-2x12 Wood Header. Attach New Header To Existing Steel Column With Simpson HUC412 Joist Hanger. Weld Per Manufacturers Specs.
7	New E.I.F.S. Over Rigid Insulation On Tyvek Stucco Wrap Over New 1/2" Exterior Sheathing Over New 2x Infill Framing. Refer: Ext. Finish Notes. Provide Flush Transition To Adjacent E.I.F.S.
8	Existing Prefinished Sloped Metal Roofing To Remain, Paint. Refer: Building Elevations & Exterior Finish Notes.
9	2'-0" High Prefabricated Backlit Accent Band, Provided And Installed By Signage Manufacturer.
10	Existing Roofing, Insulation & Substrate To Remain, Protect During Construction.
11	New 2x6 Infill Framing @ 16"o.c. From New 3-2x12 Header Up To New Double Top Plate.
12	Existing 2x6 Wood Studs @ 16"o.c.
13	New 5/8" Gypsum Board. Finish Per Decor Drawings.
14	New Cont. 2x6, Verify. Provide (2) #10x4" Screws Into New Studs.
15	Existing Glazing System To Be Modified As Indicated. Cut Back Exist. & Provide New Mullions & Glazing Where Indicated.
16	New Solid Wood Trim To Match Existing.
17	Existing Metal Coping To Remain. Prepare And Paint. Refer: Building Elevations & Exterior Finish Notes.
18	New Suspended Grid To Match Exist. w/ New Lay-In Ceiling Tile.
19	Existing Glazing System To Remain.
20	R-19 Batt Insulation. Facing As Required By Code.
21	Existing Steel "Y" Shaped Window Support To Be Removed Above New Header. (Side/Jamb Vertical Posts To Remain).
22	Existing Steel Beam Header To Remain.
23	Existing Glazing Unit To Be Removed.
24	Existing Sloped Roof Framing To Remain.
25	Existing 5/8" Gypsum Board. Finish Per Decor Drawings.
26	Existing Concrete Footing To Remain, Verify.
27	Existing Concrete Slab To Remain.
28	Existing E.I.F.S. Cornice And Trims To Remain, Paint. Refer: Building Elevations & Exterior Finish Notes.
29	New E.I.F.S. Finish W/Brick Stencil Pattern, Color #1, Over Existing E.I.F.S. Remove Decorative Tiles, Skim And Fill Existing Field Of Reveals Around Sign. Refer: Exterior Finish Notes.

White Design Group, P.C.
Restaurant and Interiors Consulting
5801 EAST 41ST STREET, SUITE 712, TULSA, OKLAHOMA 74135

New Remodel For:
Arby's #7522 - 917 W. Center St.
Greenwood, Arkansas

Sheet Content
Section, Tower Isometric, General Notes, Field Verification Note

Sheet Number
A301
Date: 01-08-21