-	20
Scale: NO SCALE	M-501

-	16
Scale: NO SCALE	M-501

-	4
Scale: NO SCALE	M-501

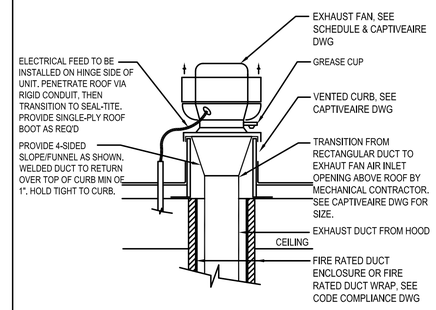

-	19
Scale: NO SCALE	M-501

-	15
Scale: NO SCALE	M-501

-	7
Scale: NO SCALE	M-501

GREASE EXHAUST FAN DETAIL	3
Scale: NO SCALE	M-501

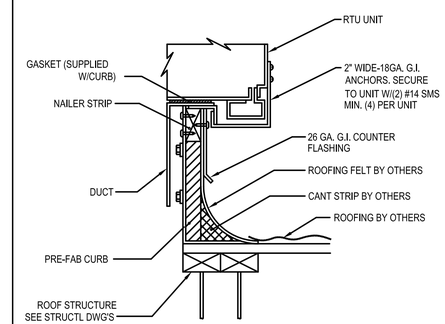

-	18
Scale: NO SCALE	M-501

-	14
Scale: NO SCALE	M-501

RTU UNIT CURB DETAIL	2
Scale: NO SCALE	M-501

SEQUENCE OF OPERATIONS:
UPON ACTIVATION OF THE KITCHEN HOOD ANSUL SYSTEM, THE DRY CONTACT WITHIN THE HOOD CONTROL PANEL SHALL OPEN AND SEND A CONTROL SIGNAL FOR ROOFTOP UNIT SHUTDOWN. SHUTDOWN SHALL OCCUR VIA AN ISOLATION RELAY TO THE (3) ROOFTOP UNITS SUPPLYING MAKE-UP AIR TO THE HOOD. E.C. TO PROVIDE CABINET, RELAY, TRANSFORMER AND ALL NECESSARY CONDUIT AND WIRING IN ORDER TO PROVIDE A, COMPLETE, FULLY FUNCTIONING SYSTEM.

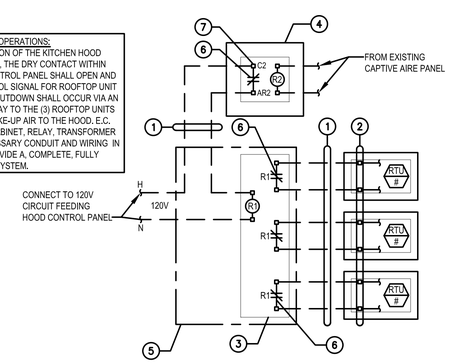

LEGEND

1. (2) #12 CONTROL WIRES IN 1/2" CONDUIT BY E.C.
2. M.C. TO CONNECT INTO REMOTE UNIT SHUTDOWN TERMINAL ON CARRIER ROOFTOP UNIT CONTROL BOARD AND REMOVE JUMPER. REFER TO MANUFACTURER FOR ADDITIONAL INFORMATION.
3. DPDT 120V RATED RELAY BY E.C. ENERGIZE FOR FAILSAFE OPERATION.
4. HOOD CONTROL PANEL AT KITCHEN.
5. 12X12X6 NEMA 1 CABINET MOUNTED ON WALL ADJACENT TO KITCHEN HOOD BY E.C.
6. N.O. DRY CONTACT (SHOWN ENERGIZED) THAT OPENS IN FIRE CONDITIONS.
7. 120V RATED DRY CONTACT WITHIN CAPTIVE AIRE PANEL.

-	17
Scale: NO SCALE	M-501

-	13
Scale: NO SCALE	M-501

RTU CONTROL WIRING DIAGRAM	5
Scale: NO SCALE	M-501

-	1
Scale: NO SCALE	M-501

PANDA EXPRESS, INC.
1683 Walnut Grove Ave.
Rosemead, California
91770
Telephone: 626.799.9898
Facsimile: 626.372.8288

All ideas, designs, arrangement and plans indicated or represented by this drawing are the property of Panda Express Inc. and were created for use on this specific project. None of these ideas, designs, arrangements or plans may be used by or disclosed to any person, firm, or corporation without the written permission of Panda Express Inc.

REVISIONS:

ISSUE DATE:

1st	DEVELOPER REVIEW	07.15.19
2nd	SITE PLAN SUBMITTAL	08.26.19
3rd	SITE COMMENTS	09.05.19
4th	ISSUE FOR PERMIT	10.01.19
5th	ISSUE FOR BID	11.07.19

DRAWN BY: PM / KL / EA

PANDA PROJECT #: S8-20-D7163
ARCH PROJECT #: 19027

James F. Turner Engineers, L.P.
Consulting Engineers
8340 Meadow Road, #160
Dallas, TX 75231
214.750.2900
Job #47296
CoA #FA-5874-E

ALABAMA REGISTERED No. 14570 PROFESSIONAL ENGINEER JAMES F. TURNER
11/7/19

Heights Venture
ARCHITECTURE DESIGN

HOUSTON
1111 North Loop West, Suite 800
Houston, Texas 77008
713 869 1103 V

DALLAS
5741 Legacy Drive, Suite 320
Plano, Texas. 75024
972 490 7292 V

PANDA EXPRESS

2096 INTERSTATE DR.
OPELIKA, AL, 36801

3600 FSDT

TWW REMODEL

M-501

MECHANICAL DETAILS

BID ISSUE

TRUE WARM & WELCOME